GKOLED®

Series **GKOPLG3**

LED PANELS

Installation Guide

⚠ WARNING

PLEASE READ ALL INSTRUCTIONS BEFORE ATTEMPTING INSTALLATION

— To reduce the risk of death, personal injury, or property damage from fire, electric shock, falling parts, cuts/abrasions, and other hazards, read all warnings and instructions with and on the fixture box and fixture labels.
— Before installing, servicing, or performing routine maintenance upon these fixtures, follow all general precautions.
— Commercial installation, service, and maintenance of luminaires should be performed by a qualified licensed electrician.
— If you are unsure about the installation or maintenance of the luminaires, consult a qualified licensed electrician, and check your local electrical code.
— To prevent wiring damage or abrasion, do not expose wiring to edges of sheet metal or other sharp objects.
— Do not make or alter any open holes in an enclosure of wiring or electrical components during kit installation.
— Turn off electrical power at fuse or circuit breaker box before wiring fixture to the power supply.
— Turn off the power when performing any maintenance.
— Verify that supply voltage is correct by comparing it with the luminare label information.
— All wiring connections should be capped with UL approved wire connectors.
— Avoid direct eye exposure to the light source while it is on.
— Account for small parts and destroy packing material, as these may be hazardous to children.
— Risk of burn. Disconnect power and allow fixture to cool before changing the bulb or handling the fixture.
— GREEN GROUND SCREW PROVIDED IN PROPER LOCATION. DO NOT RELOCATE.
— MINIMUM 194°F (90°C) SUPPLY CONDUCTORS.
— SPECIFICATIONS AND DIMENSIONS SUBJECT TO CHANGE WITHOUT NOTICE.
— SUITABLE FOR DRY OR DAMP LOCATION, TYPE IC.

Installation Guide

Always turn off the power supply from main circuit breaker first before installing.

Recessed Mounting - Standard for Regular Model & Emergency Battery Backup Model

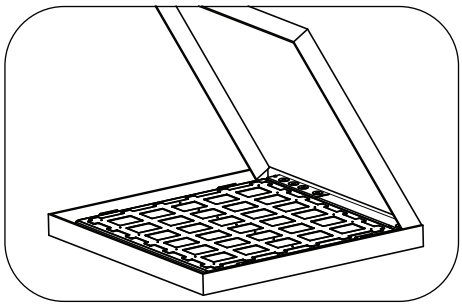

1. Carefully unpack unit and properly inspect for defects before installing. Wear work gloves to prevent dirt and oil from being transferred to the luminaire. If cleaning is needed, use gloves and a dry cotton cloth. It is not recommended to use hazardous chemicals.

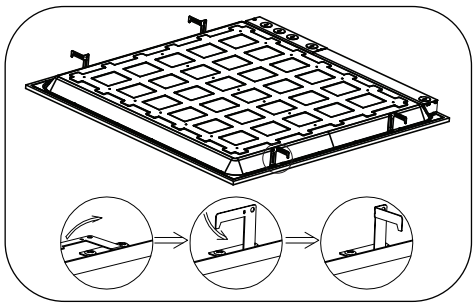

2. Lift up four mounting clips on the sides of the luminaire. You can do it by hand while wearing work gloves or use pliers.

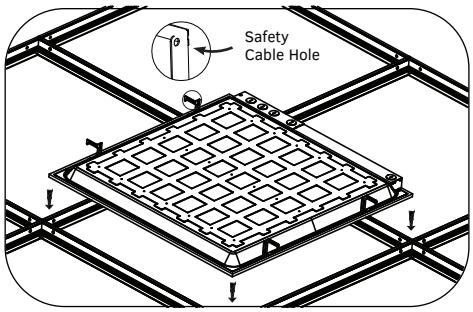

3. Insert luminaire into T-bar ceiling grid. Secure safety cable to connection hole as needed to meet local seismic requirements. Safety cable and method of attachment to the building are provided by contractor according to local building codes.

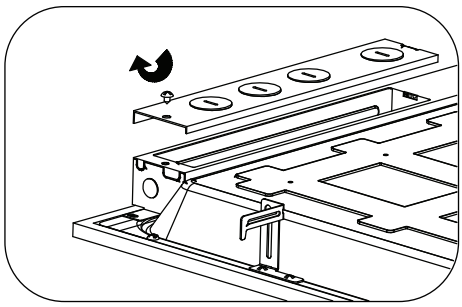

4. Remove electrical enclosure cover. Carefully remove knockout for AC line input wires and 0-10V control line. Install listed electrical fittings in the knockout holes for wire protection if needed.

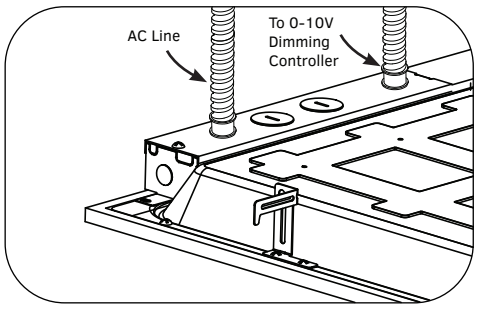

5. Plug in AC line (L, N, and GND) to the LED Driver using 18-14AWG Wire. When connecting 0-10V dimming controller, wires must run through a separate knockout hole equipped with an appropriate electrical fitting.

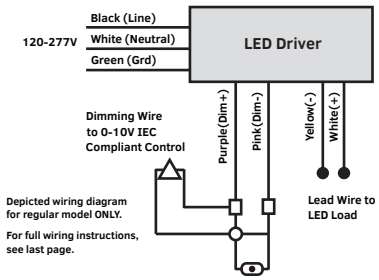

6. Follow the wiring diagram for the specific model you are installing. When using the 0-10V dimming controller run wires from controller through a different knockout than the AC input wire. Replace the electrical enclosure cover and tighten the screws.

Cable Suspended Mounting - Optional for Regular Model & Emergency Battery Backup Model (Suspension Kit Sold Separately)

1. Replace the existing earthquake tabs with the provided brackets, used for attaching adjustable cables (Figure 1).

2. Pull the end cap of Cable A through the provided flange and make sure the end cap is securely positioned in the flange. Repeat on the other cable. Use the included self-tapping screws and expansion anchors to securely attach the two flanges to the ceiling (Figure 2).

3. Make sure the end of Cable A is inserted into the gripper attached to Cable B. You may then pull on the end of Cable A to shorten the height of Cable A. The previous height of Cable A may be restored by unscrewing the wire rope lock and carefully pulling on the Cable.

4. Attach the hooks on the ends of Cable B to the brackets attached to the fixture in Step 1 and make final adjustments.

5. Connect the LED driver to AC mains power.

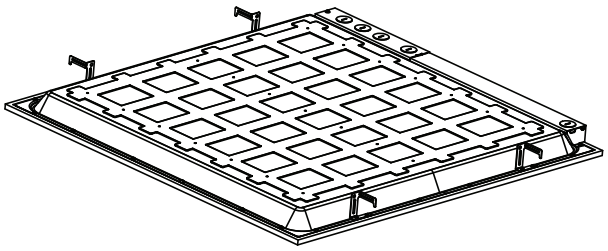

Figure 1

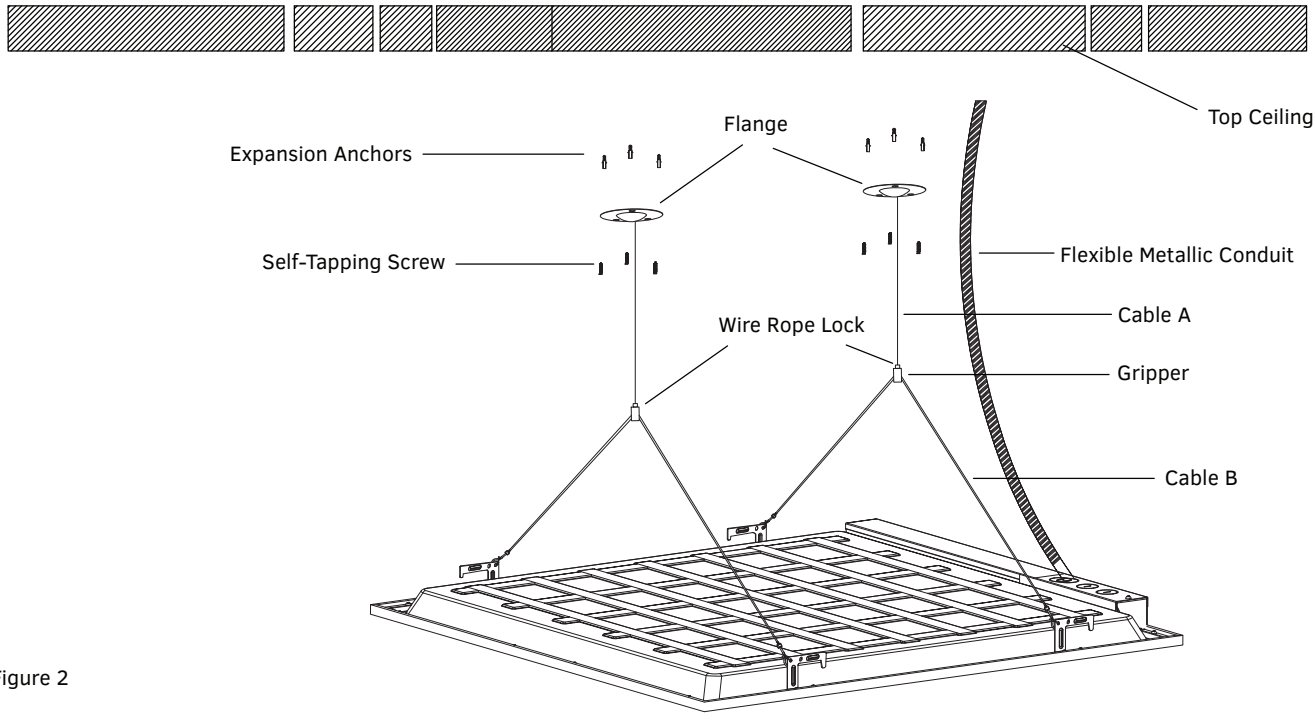

Figure 2

Surface Mounting - Optional for Regular Model & Emergency Battery Backup Model (Surface Mounting Kit Sold Separately)

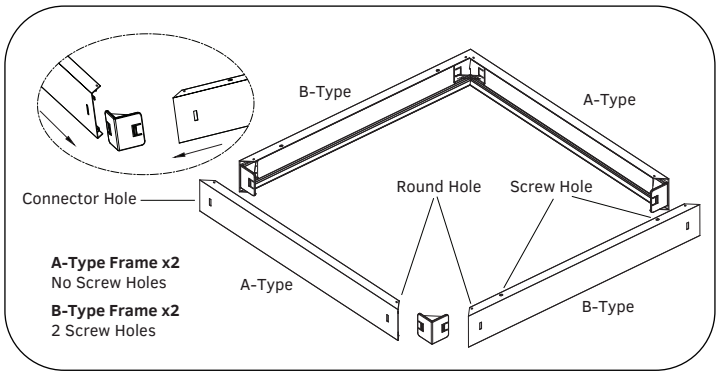

1. Assemble the surface frame by connecting the A-Type and B-Type frames. This is done by sliding the corner connectors into the slots on the back of the frames, until the tabs on the sides of the connectors lock in place in the connector holes on the sides of the frames. When assembling, ensure all screw holes and round holes on the A-Type and B-Type frames are facing the same direction. Additionally, make sure that the two A-Type and two B-Type frames are across from each other, as indicated on the image above. If a mistake is made during assembly, the frames can be disassembled by pushing in the tabs from the connectors and pulling the frames apart.

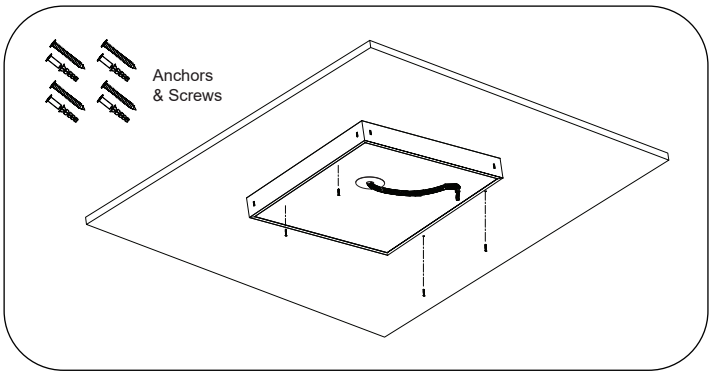

2. Using the square frame as a positioning guide, place the frame with screw holes facing up and mark their locations, then use the anchors and screws to secure the frame to the ceiling. Only the B-Type frames have screw holes, which are located closer to the center of the frame.

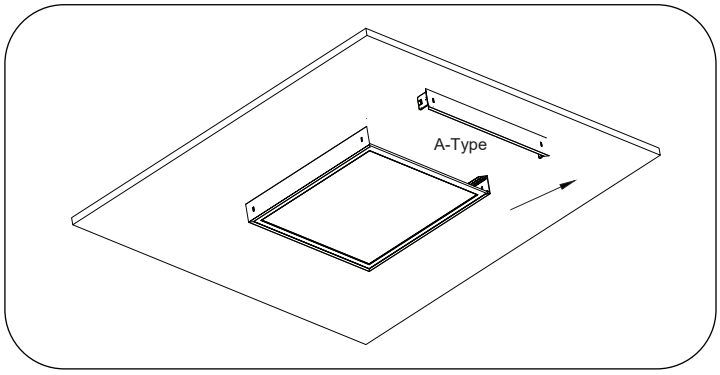

3. Remove one of the A-Type frames by pushing in the tabs from the connectors and pulling the frame out.

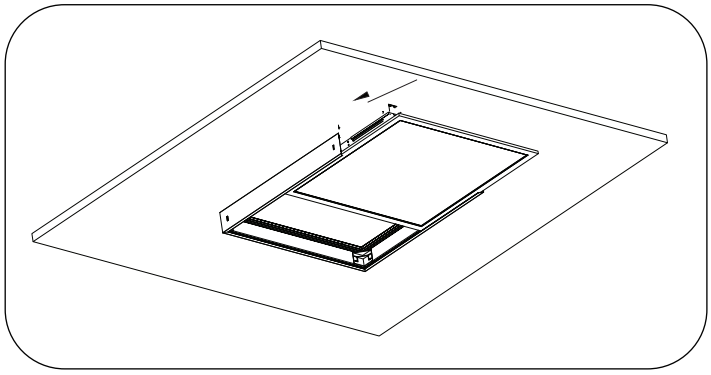

4. Make wiring connections to the main power according to local code and insert the LED Panel into the frame.

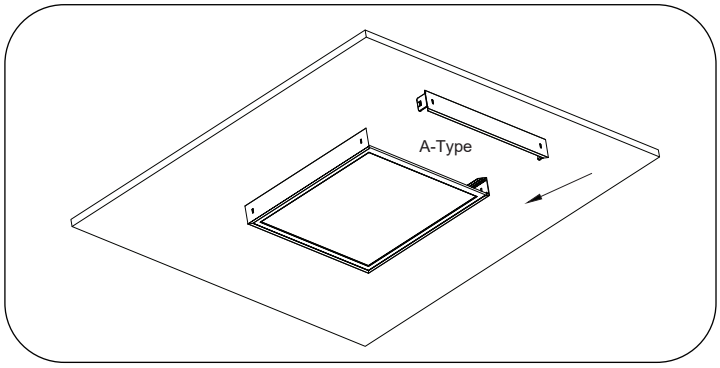

5. Replace the A-Type frame into the slot, ensuring it is locked in place by the plastic corner connectors.

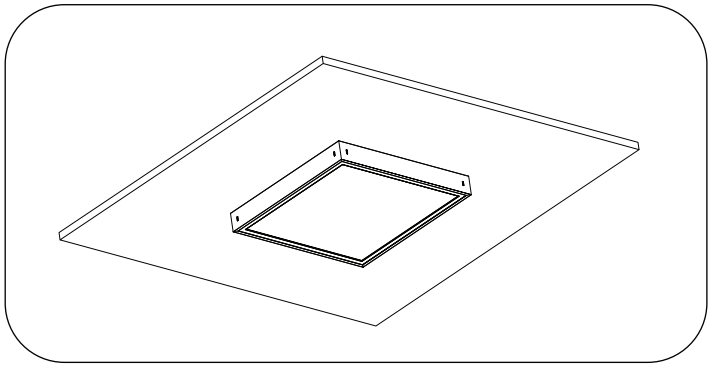

6. Installation is completed. Fixture is ready to power on.

Test Switch & LED Indicator Light - Emergency Battery Backup Model ONLY

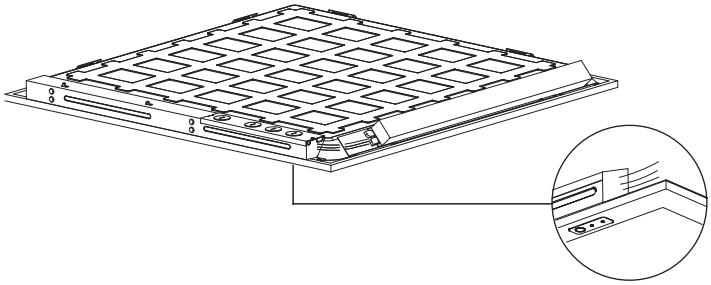

Test Switch - Used to test if the Emergency Mode on the Emergency Battery Backup Model is operating properly.

- When the main power supply is on, the emergency battery backup will be in Charging Mode until the Test Switch is pressed.
- When the main power supply is on and the Test Switch is pressed, the emergency battery backup will go into Emergency Mode.
- When the fixture is in Emergency Mode, press the Test Switch for 3 seconds to turn Emergency Mode off.

LED Indicator Light - Used to indicate the current state of the fixture.

- A stable red light indicates the fixture is in Charging Mode or fully charged.
- When the red light is off the main power supply is off or the fixture is in Emergency Mode.

Power & CCT Adjustment Controls - Optional on Regular Model & Emergency Battery Backup Model

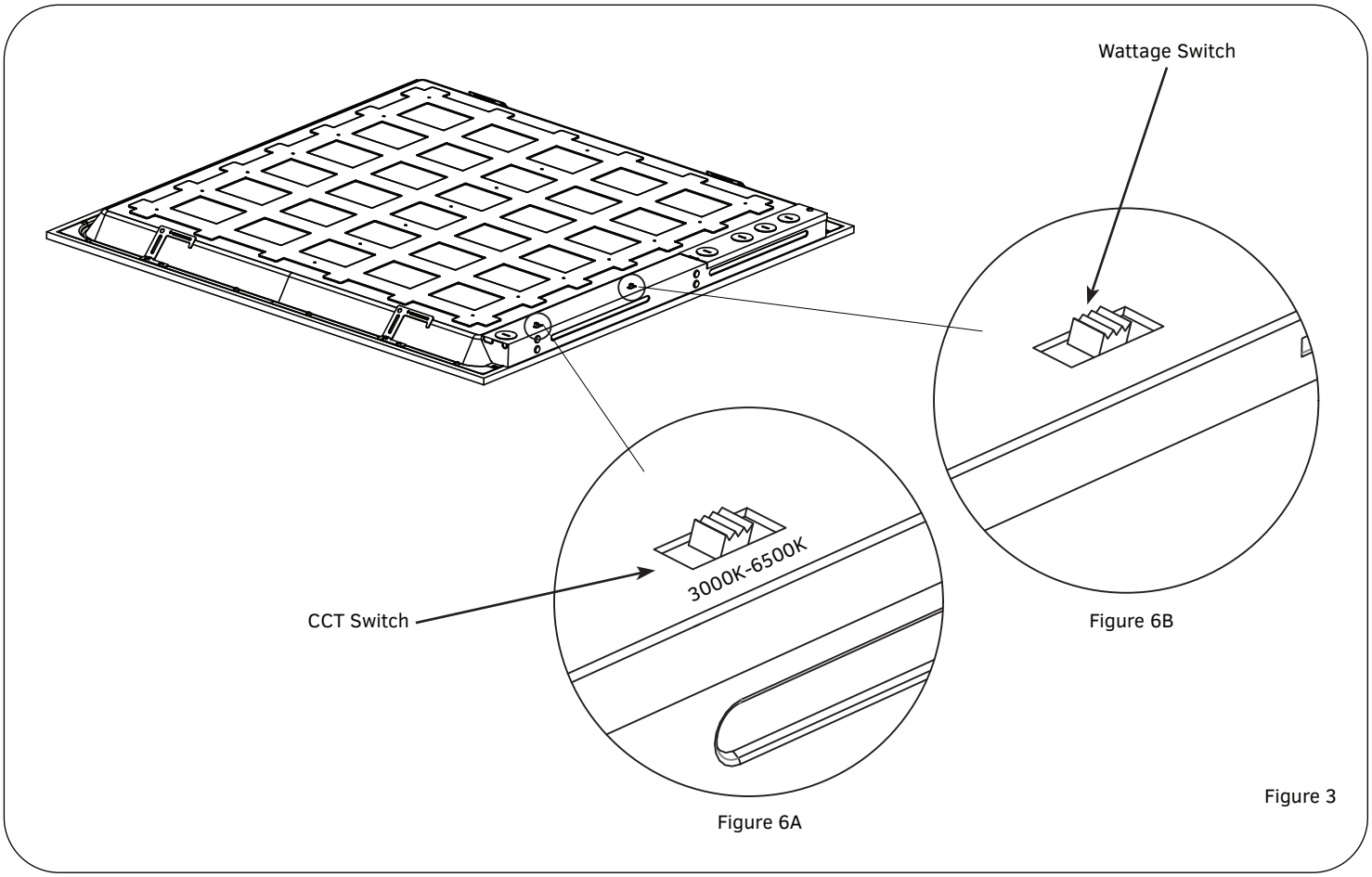

The end user may adjust the CCT and lumen output using two DIP switches integrated into the driver. Each DIP switch has settings respectively corresponding to 5 CCT and 4 wattage options.

1. DIP switches to control the CCT and lumen output are located on the driver box (Figure 3).

2. Select a CCT and wattage by sliding the corresponding DIP switch left or right respectively to the desired value (Figure 6A and 6B).

Power & CCT Adjustment Options For Each LED Panel Model

Size	CCT Options	Power Options
2x2	65K / 50K / 40K / 35K / 30K	32W / 26W / 19W / 16W
1x4	65K / 50K / 40K / 35K / 30K	32W / 26W / 19W / 16W
2x4	65K / 50K / 40K / 35K / 30K	43W / 36W / 30W / 22W

***Emergency Battery Backup Model ONLY: During a power outage, CCT will default to 5000K.**

Wiring Diagram - Without Emergency Battery Backup, See Below For Emergency Battery Backup Model

Symbols

Symbol	Purpose
□	Connectors
○	Intersecting Wires (Not Connected)
⊙	Sensor Socket
△	0-10V Dimmer

IMPORTANT: Either dimming or a sensor can be used on the same fixture - not both.

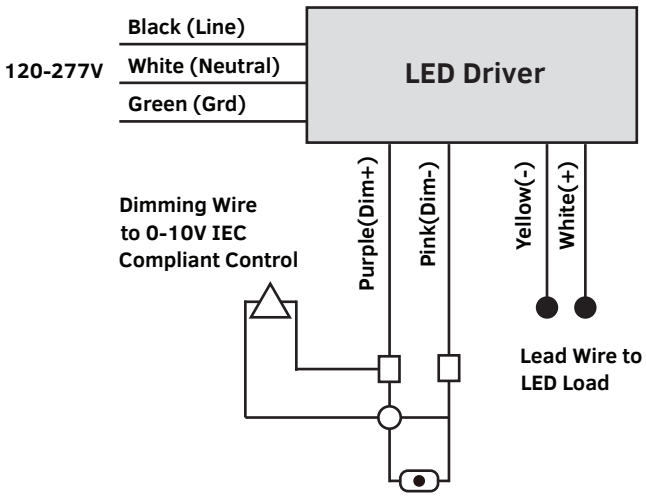

Wiring Diagram - With Emergency Battery Backup

AC Input

Wire Color	Purpose
18AWG Red	24/7 AC Line
18AWG Black	AC Line Switch
18AWG Blue/White	LED Driver L
18AWG White	Neutral

DC Output

Wire Color	Purpose
18AWG Brown	LED Module +
18AWG Blue	LED Module -
18AWG Purple	To LED Driver +
18AWG Pink	To LED Driver -

Test Switch & LED Indicator

Wire Color	Purpose
22AWG Brown	Test Switch LED Indicator +
22AWG White	Test Switch LED Indicator -

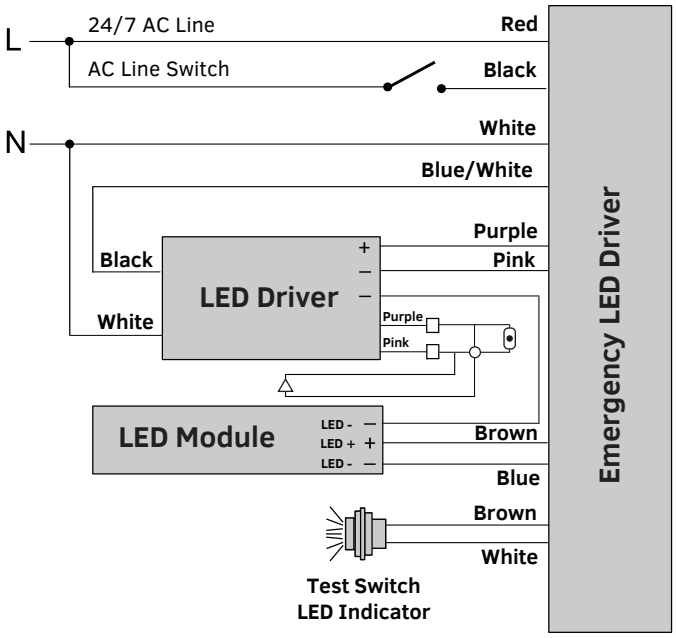

Symbols

Symbol	Purpose
□	Connectors
○	Intersecting Wires (Not Connected)
⊙	Sensor Socket
△	0-10V Dimmer

IMPORTANT: Either dimming or a sensor can be used on the same fixture - not both.